HP ECO Cable screw gland with locknut, PG 7 grey | gray

ECO IP67 mit Gegenmutter

Product number 50050
Weight 0.544kg

Illustrations are for reference only. Technical specifications may vary and are subject to change without notice.

Product description

- material: polyamide
- protection spec.: IP 67
- temperature resistance: continous use -20 °C up to +80 °C

Product properties

Protection spec.	IP 67
Type of packaging	100
Brand	HP-ECO®
Thread type	PG
Temperature resistant	-20 °C – 80 °C
H	30 mm
Thread (AG)	PG 7
Material	Polyamide
GL	8 mm
Colour	gray
Nominal size	PG 7
Key size	16 mm
Version	with locknut
min. - max. cable diameter	3 - 6,5 mm
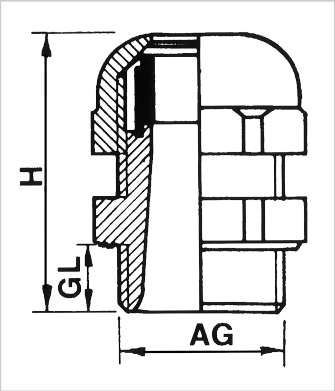
More images