# HP ECO Cable screw gland with locknut, PG 7 grey | gray

ECO IP67 mit Gegenmutter

**Product number** 50050
**Weight** 0.544kg

Illustrations are for reference only. Technical specifications may vary and are subject to change without notice.

## Product description

- material: polyamide
- protection spec.: IP 67
- temperature resistance: continous use -20 °C up to +80 °C

## Product properties

| | |
|---|---|
| **Protection spec.** | IP 67 |
| **Type of packaging** | 100 |
| **Brand** | HP-ECO® |
| **Thread type** | PG |
| **Temperature resistant** | -20 °C – 80 °C |
| **H** | 30 mm |
| **Thread (AG)** | PG 7 |
| **Material** | Polyamide |
| **GL** | 8 mm |
| **Colour** | gray |
| **Nominal size** | PG 7 |
| **Key size** | 16 mm |
| **Version** | with locknut |
| **min. - max. cable diameter** | 3 - 6,5 mm |
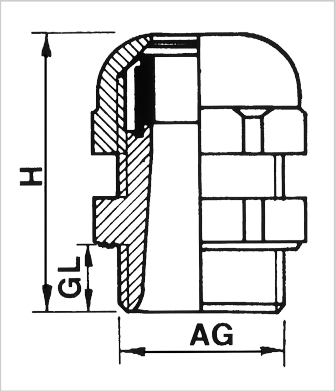
## More images