HP-ECO Iso insulators for low voltage with long thread, M8, black, 50 mm

Illustrations are for reference only. Technical specifications may vary and are subject to change without notice.

Product number 91623

Weight 0.851kg

Product description

- **Insulation:**
- thermosetting polyester reinforced with 20% fiberglass
- self-extinguishing: V0-UL94
- colour: Red RAL 3031
- **Threaded inserts:**
- galvanized steel
- **Final product:**
- rated voltage: 1000 V AC/1500 V DC
- working temperature: -40 °C up to +130 °C

Product properties

Threaded bolt material	Galvanized steel
Colour	red
Typ	ECO
D	20 mm
Insulation material properties	self-extinguishing , reinforced with 20 % glass fiber
Thread (M)	M8
Flame retardancy	UL 94 V-0
Temperature resistant	-40 °C – 130 °C
Insulation material	Thermosetting polyester resin
Type of packaging	25
R.T.	8,0 kN
R.C.	45 kN
R.F.	2,2 kN
H	50 mm
Rated voltage DC	1500 V
f	9 mm
e	8,5 mm
CH	21 mm
Nominal voltage AC	1000 V
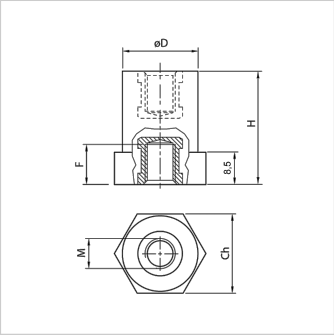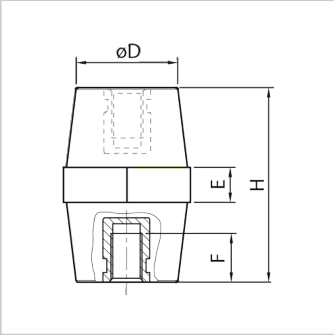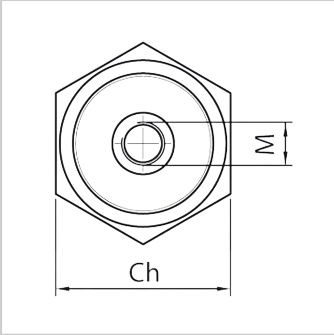
More images